MOSFETS (PWM Capable, External V+)

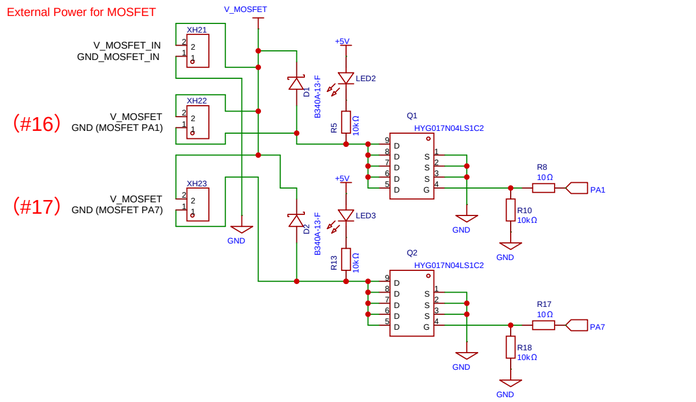

XH21 is power input, XH22 is output group 1, XH23 is output group 2; outputs follow the external input voltage

5V Output (PWM Capable)

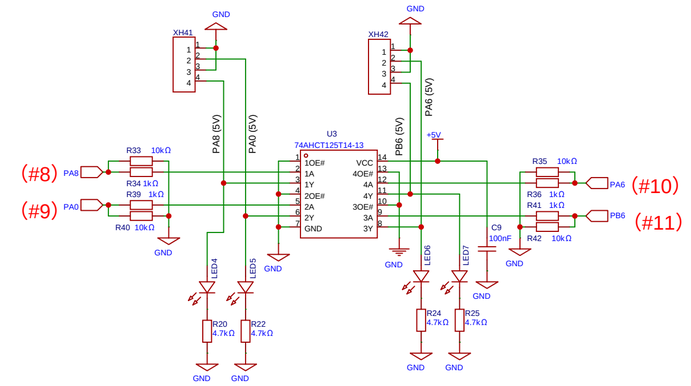

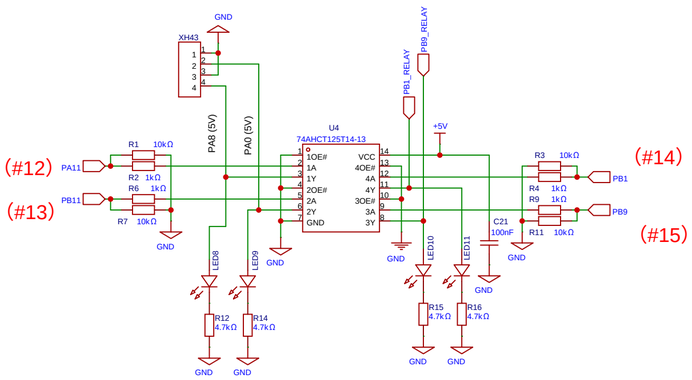

Inputs

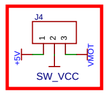

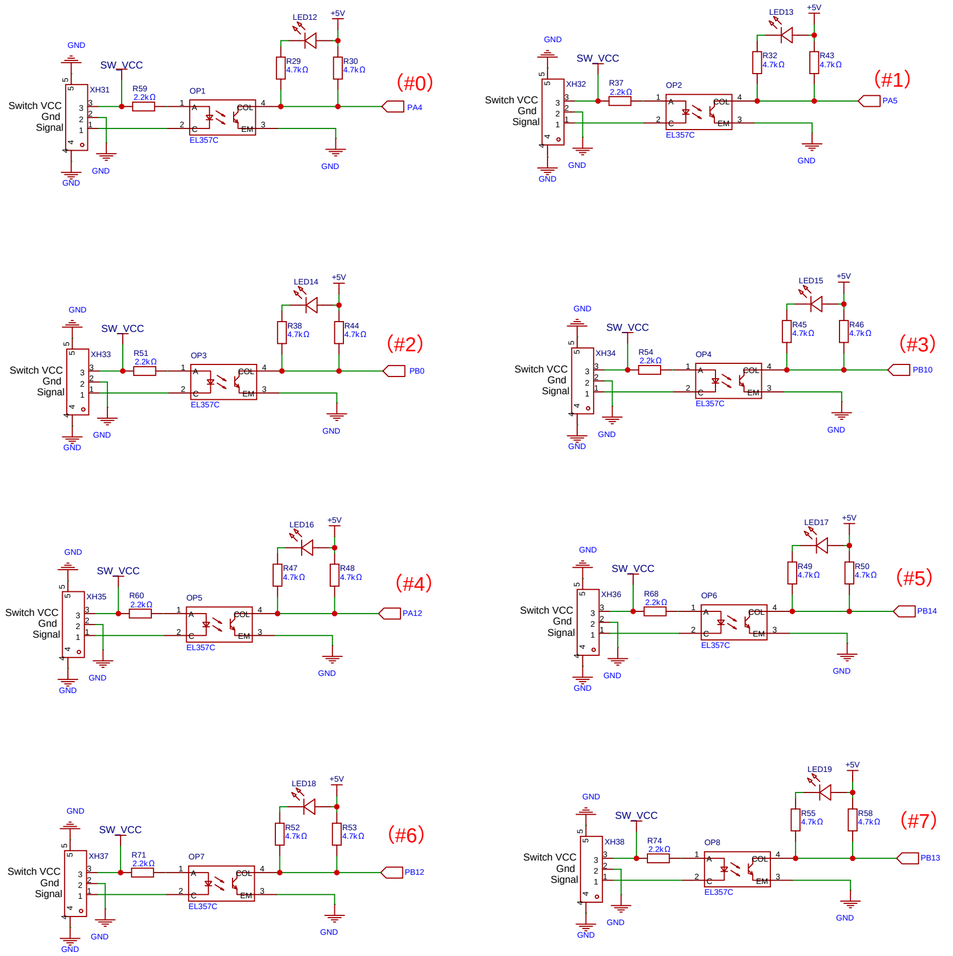

STM32

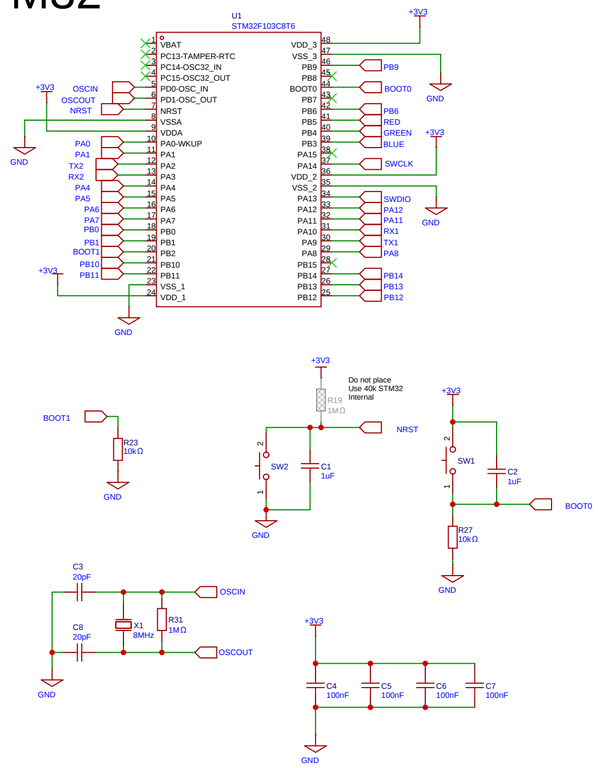

3.3v Power Supply

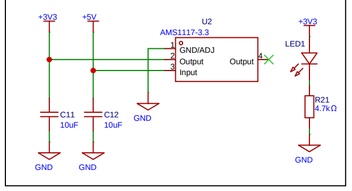

ST-Link (programming Connector)

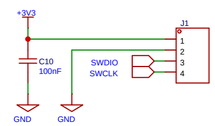

Solid State Relay Output--

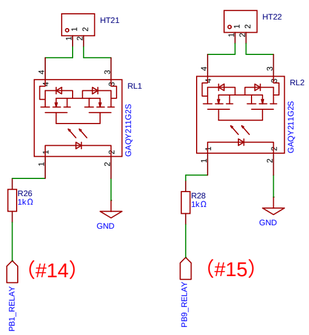

UART1 (From FNC MAIN BOARD)--IN

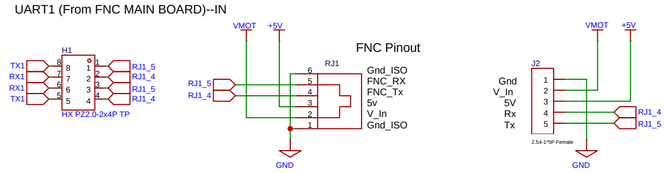

If TX/RX are swapped, just swap the other jumper pair; default 8-1, 7-2

UART2 (To Pendants)--OUT

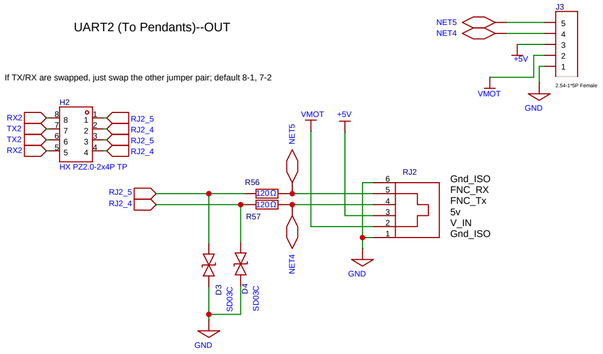

If TX/RX are swapped, just swap the other jumper pair; default 8-1, 7-2

Mounting holes

Status LED

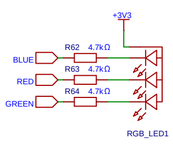

Output

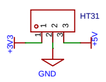

io_num	usage	Pin	Function	TIM	ch	Note
0	I0	**PA4**	IN|PU|PD	0	0	Input
1	I1	**PA5**	IN|PU|PD	0	0	Input
2	I2	**PB0**	IN|PU|PD	3	3	Input
3	I3	**PB10**	IN|PU|PD	2	3	Input
4	I4	**PA12**	IN|PU|PD	0	0	Input
5	I5	**PB14**	IN|PU|PD	0	0	Input
6	I6	**PB12**	IN|PU|PD	0	0	Input
7	I7	**PB13**	IN|PU|PD	0	0	Input
8	O0	**PA8**	OUT|PWM	1	1	PWM Output
9	O1	**PA0**	OUT|PWM	2	1	PWM Output
10	O2	**PA6**	OUT|PWM	3	1	PWM Output
11	O3	**PB6**	OUT|PWM	4	1	PWM Output
12	O4	**PA11**	OUT|PWM	1	4	PWM Output
13	O5	**PB11**	OUT|PWM	2	4	PWM Output
14	O6	**PB1**	OUT|PWM	3	4	PWM Output
15	O7	**PB9**	OUT|PWM	4	4	PWM Output
16	FET0	**PA1**	OUT|PWM	2	2	FET Drive
17	FET1	**PA7**	OUT|PWM	3	3	FET Drive